For More Information
Please Contact Best Scientific

Tel • +44 (0)1793 812477
Email • enq@bestscientificweb.com
Web • www.bestscientificweb.com
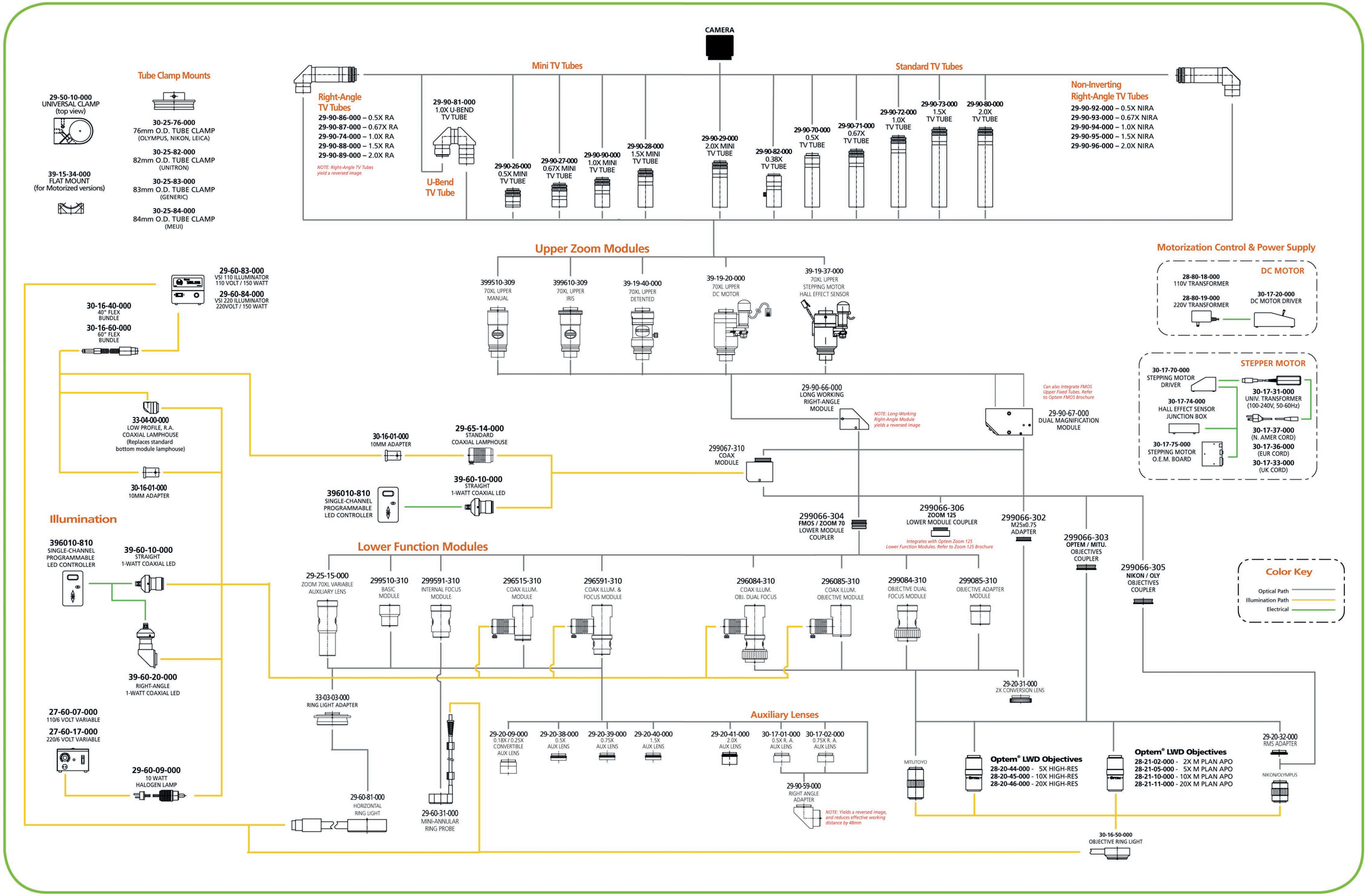
Zoom 70XL Lens System Diagram